Province of the
EASTERN CAPE
EDUCATION

NATIONAL SENIOR CERTIFICATE

GRADE 12

SEPTEMBER 2011

MECHANICAL TECHNOLOGY

MARKS: **200**

TIME: **3 hours**

* M C H T E A *

This question paper consists of 21 pages including an answer sheet and formula-sheets.

INSTRUCTIONS AND INFORMATION

1. Write your examination and centre number in the space on the answer book.

2. Answer ALL the questions.

3. Read all the questions carefully.

4. Number the questions correctly according to the numbering system used in this question paper.

5. Write neatly and legibly.

6. Show ALL the calculations and units.

7. Candidates are allowed to use non-programmable, scientific calculators and drawing/mathematical instruments.

8. The value of gravitational acceleration constant should be taken as 10 m/s^2.

9. QUESTION 1 to be answered on answer sheet attached to question paper.

10. Use the criteria below to assist you in managing your time:

Question	Assessment Standards	Content covered	Marks	Time
1	1 – 9	Multiple-choice questions	20	18 minutes
2	6 and 8	Forces, Systems and Control	50	45 minutes
3	2	Tools/equipment	20	18 minutes
4	3	Materials	20	18 minutes
5	1, 4 and 5	Safety Terminology Joining methods	50	45 minutes
6	7 and 9	Turbines and maintenance	40	36 minutes
		TOTAL	**200**	**180 minutes**

SECTION A:

QUESTION 1 MULTIPLE-CHOICE QUESTIONS

(LEARNING OUTCOME 3: ASSESSMENT STANDARDS 1 – 9)

Various options are provided as possible answers to the following questions. Choose the answer and make a cross (X) in the appropriate block on the ANSWER SHEET, for example

1.21	A	B	~~C~~	D

1.1 Brass is an alloy of which non-ferrous metals?

A. Copper and Zinc
B. Copper and Tin
C. Tin and Lead
D. Zinc and Lead (1)

1.2 Teflon is known for its non-stick coating for cooking utensils and is therefore …

A. water resistant.
B. oil resistant.
C. corrosion resistant.
D. All of the above (1)

1.3 The function of the multimeter is to …

A. test different electrical components and circuits.
B. determine the hardness of a metal.
C. determine the pressure in a system.
D. determine the end play on a crankshaft. (1)

1.4 C.N.C. machines provide advantages to those of conventional machines. Which one does not fit?

A. C.N.C. can work for 24 hours a day.
B. C.N.C. is suitable for production work.
C. C.N.C. is cheaper than conventional machines.
D. C.N.C. is easier to upgrade. (1)

1.5 The dividing head ratio is …

A. 1:40
B. 20:1
C. 1:80
D. 40:1 (1)

1.6 A learner applies a force of 100 N to a spanner 250 mm long. The moment applied to the nut is …

A. 25 kN.m
B. 400 N.m
C. 25 N.m
D. 0,4 N.m (1)

1.7 The gear ratio of the compound gear drive in FIGURE 1.7 is …

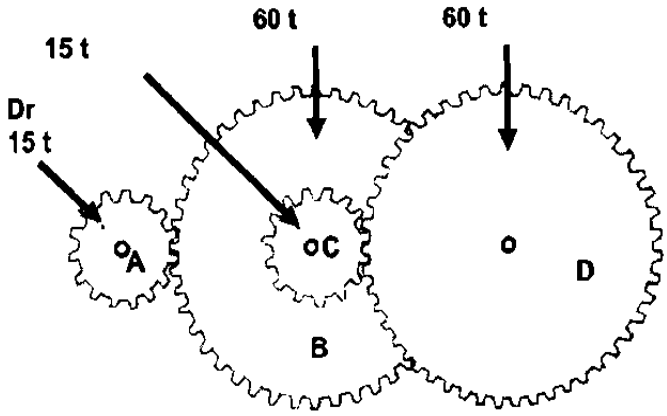

FIGURE 1.7

A. 1:16
B. 1:4
C. 16:1
D. 4:1 (1)

1.8 A centrifugal supercharger is driven by …

A. exhaust gases.
B. steam.
C. a mechanical drive.
D. an alternator. (1)

1.9 Identify the milling cutter shown in the picture below:

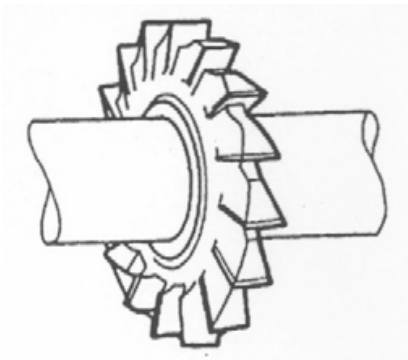

FIGURE 1.9

A. Slot milling cutter
B. Side and face milling cutter
C. T-slot milling cutter
D. Nicked helical cutter (1)

1.10 What does the abbreviation SAE denote in terms of lubricating oil?

A. Society of Automotive Engineers
B. South African Engineers
C. South American Engineers
D. Society of American Engineers (1)

1.11 The purpose of the water pump in a cooling system is to …

A. reduce heat loss.
B. eliminate the need for a radiator.
C. regulate the water temperature.
D. circulate the coolant. (1)

1.12 Where the opening at the point of a pair of shears or a guillotine is greater than 10 mm, the machine should have one of the following:

A. A self-adjusting guard
B. Bright light
C. Electronic measuring system
D. A magnetic clamping system (1)

1.13 Safety is at all times important; even if a compression test is done on a cylinder.

Which precaution does not fit?

A. Remove the high-tension leads
B. Clean the area around the spark plugs
C. Remove the air cleaner element
D. Clean and remove oil filler cap (1)

1.14 "MIG" welding stands for:

A. Mine industrial gas
B. Methane industrial gas
C. Mine inert gas
D. Metal inert gas (1)

1.15 Non-destructive testing does not involve the destruction of a test piece. Which of the following test is NOT a non-destructive test?

A. Liquid penetrant test
B. X-ray inspection
C. Ultrasonic inspection
D. Free bend test (1)

1.16 A steel bar 40 mm by 50 mm is subjected to a load of 75 kN. The bar experiences …

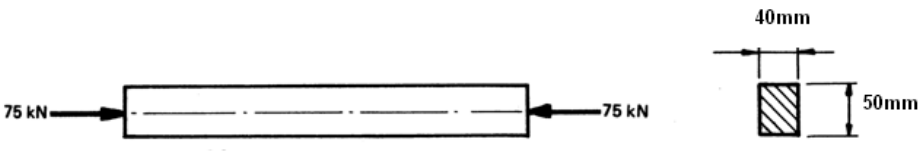

A. compressive force.
B. shearing stress.
C. tensile stress.
D. compressive stress. (1)

1.17 Cutting fluids are used during machining processes to …

A. cool the cuttings.
B. keep the work piece cool.
C. cool the machine.
D. keep work piece and tool cool. (1)

1.18 A three start Acme screw thread has a pitch of 9 mm. The lathe which is used to cut the thread has a lead screw of 5 mm pitch. What will the lead of the screw thread be?

A. 27 mm
B. 5 mm
C. 15 mm
D. 9 mm (1)

1.19 The lever in FIGURE 1.19 is a … lever?

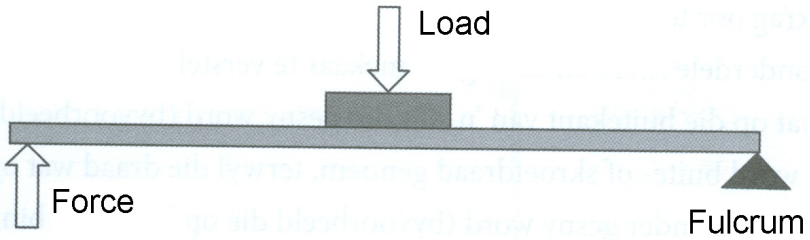

FIGURE 1.19

A. first order
B. second order
C. third order
D. Not any of the above mentioned (1)

1.20 The concept lag and boost are only applicable to …

A. twin screw superchargers.
B. roots superchargers.
C. turbochargers.
D. centrifugal superchargers. (1)

[20]

QUESTION 2 FORCES AND SYSTEMS AND CONTROL

(LEARNING OUTCOME 3: ASSESSMENT STANDARDS 6 AND 8)

2.1 A steel rod 1,2 m long with a 24 mm diameter is elongated by 0,5 mm when subjected by a tensile force of 65 kN.

Calculate the following:

2.1.1 The area of the rod (2)

2.1.2 The stress created in the rod (3)

2.1.3 The strain (2)

2.1.4 Young's modulus (3)

2.2 The breaking stress in a copper bar is 100 MPa and the working stress is 25 MPa. Calculate the factor of safety of copper. (3)

2.3 A flat belt system needs to transport coal from the mine to the factory.

The specifications are as follows:
Width = 260 mm
Density = 1,0 Mg/m^3

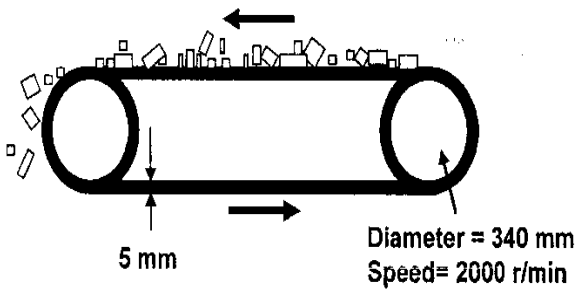

Calculate the power needed when the effective force of 350 kN is applied to the belt. (IGNORE friction and mass of the belt.) (3)

2.4 A helical gear with a real module of 3 mm, a helix angle of 37° and a pitch circle diameter of 120 mm has to be cut on a milling machine.

Calculate the following:

2.4.1 The lead of the gear (2)

2.4.2 The number of teeth on the gear (2)

2.4.3 The change gears required to cut the gear (4)

2.5 A force of 100 N is applied on piston A of a hydraulic press.

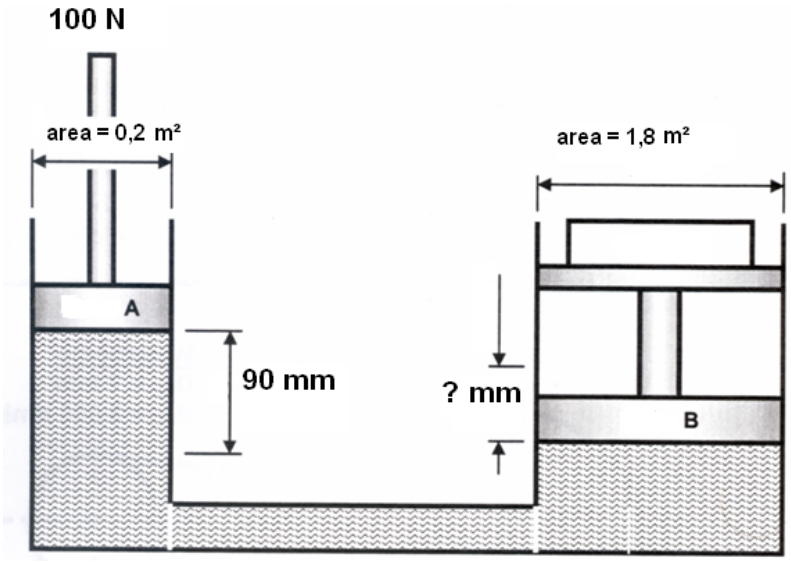

2.5.1 Calculate the force exerted by piston B. The area of piston A is 0,2 m^2 and the area of piston B is 1,8 m^2. (3)

2.5.2 Calculate the distance piston B will move if piston A moves a distance of 90 mm. (4)

2.6 A three start square thread with a lead of 12 mm must be cut on a 50 mm diameter shaft. The clearance angle is 3°.

Calculate the leading angle and trailing angle of the cutting tool. (8)

2.7 A differential wheel and axle lifting machine has a mechanical advantage of 4. A work piece weighing 130 kg must be lifted.

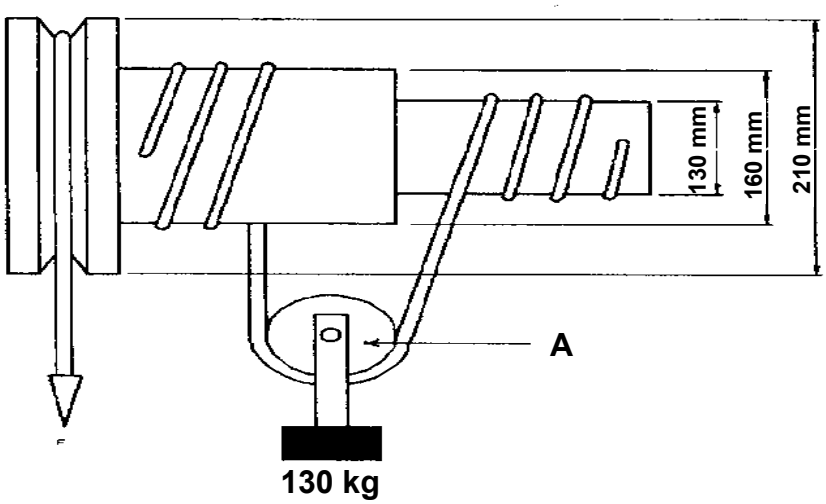

Calculate:

2.7.1 Effort applied (2)

2.7.2 Velocity ratio (2)

2.7.3 Mechanical efficiency (2)

2.8 A single plate friction clutch is used to transmit power on an engine to a pump with an effective diameter of 0,16 m. The clutch plate has friction material on both sides with a friction co-efficient of 0,36. The total applied force on the pressure plate is 3,25 kN.

Calculate:

2.8.1 The torque transmitted (2)

2.8.2 Power transmitted at 2 700 r/min in kW (2)

2.8.3 What will the sales person advise the farmer if the farmer wants more torque without increasing the effective diameter? (1)

[50]

QUESTION 3 TOOLS AND EQUIPMENT

(LEARNING OUTCOME 3: ASSESSMENT STANDARD 2)

3.1 The figure below represents the Brinell hardness tester. Answer the question that follows.

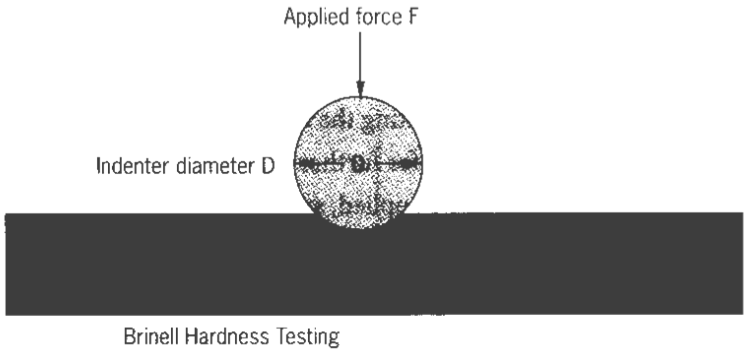

FIGURE 3.1

Interpret the following results of a Brinell hardness tester which are as follows.

82HB 10/1500/30

3.1.1 82HB (1)

3.1.2 10 (1)

3.1.3 1500 (1)

3.1.4 30 (1)

3.2 Name the TWO other types of hardness testers. (2)

3.3 You are an apprentice at Killian's engineering. You are working on a center lathe where you need to cut a screw thread.

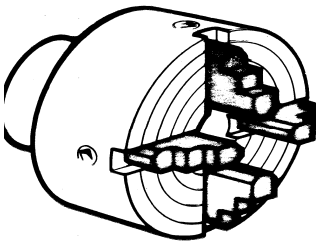

Identify the type of holding/clamping device. (2)

3.4 Interpret the following compression test results (in italics)

3.4.1 Determine the cause for v*ery low but similar readings on two adjacent cylinders*. (2)

3.4.2 Determine the cause for a*ll four cylinders showing similar kPa readings but below the minimum specifications.* (2)

3.5 Identify the precision measuring instrument:

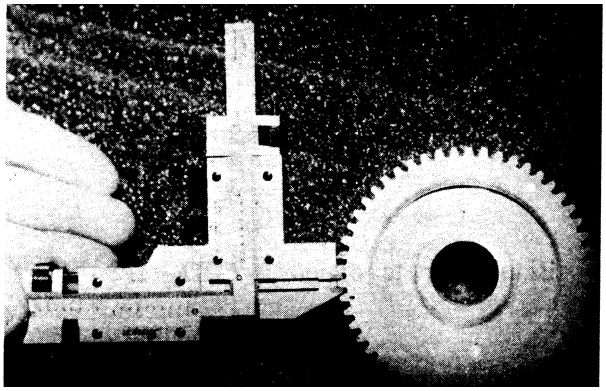

(1)

3.6 What do the hissing noises at the following places indicate when using the cylinder leakage tester?

3.6.1 The carburettor (1)

3.6.2 The exhaust pipe (1)

3.6.3 The dipstick hole (1)

3.6.4 The tappet cover (1)

3.7 The tensile tester is designed to determine three functions.

Name the THREE functions. (3)

[20]

QUESTION 4 MATERIALS

(LEARNING OUTCOME 3: ASSESSMENT STANDARD 3)

4.1 Carbon steel can be divided into three groups.

Name the THREE groups as well as its percentage carbon. (3x2) (6)

4.2 Name THREE important characteristics of aluminium. (3x1) (3)

4.3 Name THREE advantages and THREE disadvantages of thermoplastics. (3x2) (6)

4.4 A special system is implemented worldwide to classify packaging plastics. A polymer-identifying symbol is stamped on the product. On bottles for example, it is placed on the base. The number in the triangle indicates the type of polymer used. Identify the plastic material in the figures below. (Hint: abbreviation only)

4.4.1

(1)

4.4.2

(1)

4.4.3

(1)

4.5 Carbon fibre is a very popular material in sport equipment.

Name any TWO examples of equipment that's a product of carbon fibre. (2)

[20]

QUESTION 5 SAFETY, TERMINOLOGY AND JOINING METHODS

(LEARNING OUTCOME 3: ASSESSMENT STANDARDS 1, 4 AND 5)

5.1 Drill bits have different shanks because of the diameters of the shanks.

Name the TWO types of shanks as well as the diameter range of the two shanks. (2x2) (4)

5.2 Name FOUR safety precautions when working on a milling machine. (4)

5.3 Sipho is an artisan operating a milling machine at Gearmax.

Determine by means of calculation the indexing in each of the following cases that he will follow:

5.3.1 A gear with 23 teeth (Simple indexing) (3)

5.3.2 An angle of 61°20' (Angular indexing) (4)

5.4 Sipho also needs to cut a spur gear with 113 teeth. He needs to use differential indexing. (Hint: use 110 divisions)

Determine by means of calculation the following:

5.4.1 The indexing (3)

5.4.2 The change gears required (6)

5.4.3 The direction of rotation of the index plate (1)

5.5 Name the two milling methods as illustrated below:

5.5.1

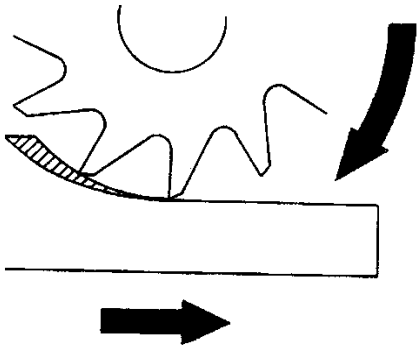

(1)

5.5.2

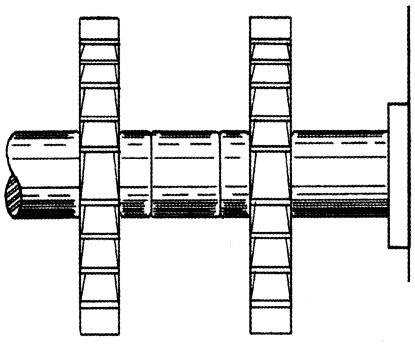

(1)

5.6 Identify the type of gear mechanism in the figure below:

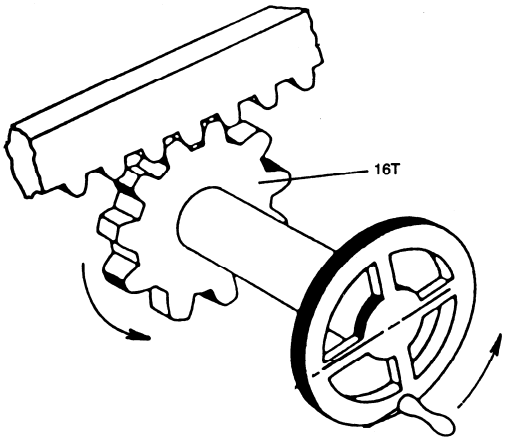

(1)

5.7 Name THREE safety precautions when handling gas cylinders. (3)

5.8 Numerous welding defects can occur during arc welding process.

Tabulate any TWO defects, it's causes and preventative methods. (6)

5.9 Waldo, a welding joint inspector, must inspect a joint. He uses the liquid dye penetrant.

Explain the liquid dye test procedure Waldo needs to follow. (6)

5.10 Thabo must set up a milling machine. The cutter diameter is 75 mm with 18 teeth, operating at a cutting speed of 30 meter per minute and a feed of 0,04 mm per tooth.

Calculate the feed in millimetre per minute. (6)

5.11 What is the main purpose of the dividing head when used on the milling machine? (1)

[50]

QUESTION 6 TURBINE AND MAINTENANCE

(LEARNING OUTCOME 3: ASSESSMENT STANDARD 7 AND 9)

6.1 A long lifespan for an engine is possible, given the oil is regularly replaced. Your uncle owns a taxi.

6.1.1 He asks you to carry out a engine oil change.

Describe step by step the above mentioned procedure. (8)

6.1.2 Your sister asks you why you have to change the engine oil.

How will you respond to your sister's question? (2)

6.2 Good lubricating oil has different properties. Viscosity is one property.

Name FOUR other properties. (4)

6.3 Describe what is meant with the term: viscosity of oil (2)

6.4 The cutting fluid used on lathe and milling machines are made of two components.

Name these TWO components. (2)

6.5 Name the transmissions used in our modern vehicles. (2)

6.6 Mr. Murray uses a blower, shown in FIGUUR 6.6, to increase the output power of his car's engine. Answer the questions that follow:

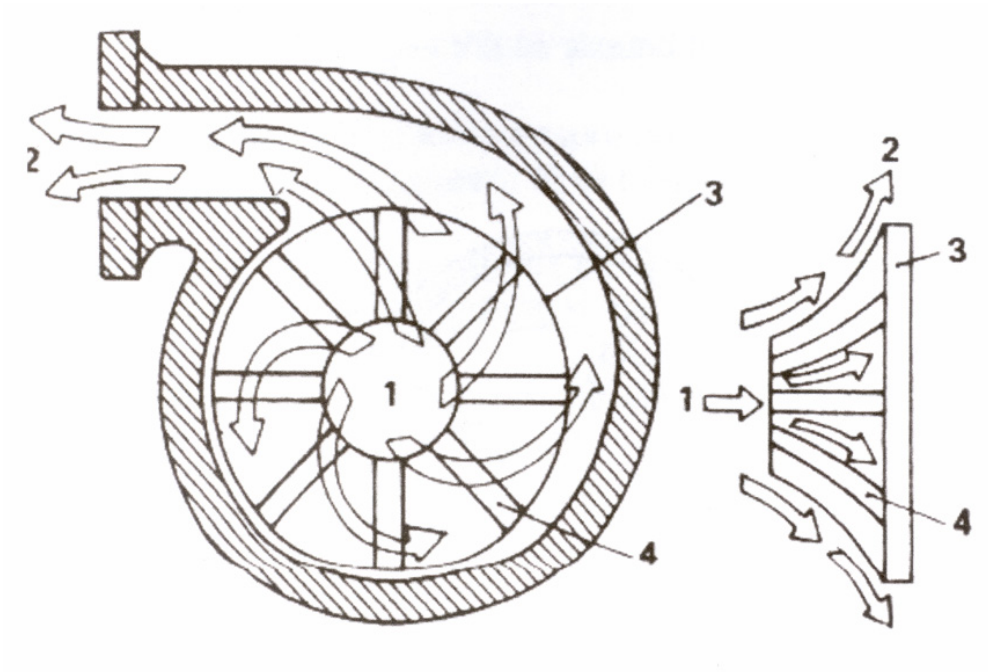

6.6.1 Name the type of blower illustrated in the diagram. (1)

6.6.2 State TWO advantages of this type of blower. (2)

6.6.3 Label the numbers 1 to 4. (4)

6.7 Name FOUR disadvantages of blowers. (4)

6.8 A flat belt is used to drive the air-conditioner pump of a motor vehicle. The driving efficiency of the belt drive is influenced by factors such as belt slip. Give FOUR reasons for beltslipping on machines. (4)

6.9 The tyres of a vehicle are subjected to wear. Wrong wheel alignment leads to excessive tyre wear.

Name FIVE factors to observe before carrying out an electronic wheel alignment test. (5)

[40]

TOTAL: 200

MECHANICAL TECHNOLOGY: GRADE 12-FORMULE SHEET

1. BELT DRIVES

1.1 Belt speed $=\frac{\pi DN}{60}$

1.2 Belt speed $= \frac{\pi(D+t)N}{60}$ (t = belt thickness)

1.3 Belt mass/kilogram = $\text{Area} \times \text{length} \times \text{density}$ (A = thickness × width)

1.4 Speed ratio $= \frac{\text{Dia.of driven pulley}}{\text{Dia.of driver pulley}}$

1.5 $N_1D_1 = N_2D_2$

1.6 Open-belt length $= \frac{\pi(D+d)}{2} + \frac{(D-d)^2}{4c} + 2c$

1.7 Crossed-belt length $= \frac{\pi(D+d)}{2} + \frac{(D+d)^2}{4c} + 2c$

1.8 Power (P) $= \frac{2\pi NT}{60}$

1.9 Ratio of tight side to slack side $= \frac{T_1}{T_2}$

1.10 Power (P) $= \frac{(T_1-T_2)\pi DN}{60}$ where T_1 = force in the tight side

1.11 Width $= \frac{T_1}{Permissible\ tensile\ force}$

2. FRICTION CLUTCHES

2.1 Torque (T) = μWnR

μ = coefficient of friction
W = total force
n = number of friction surfaces
R = effective radius

2.2 Power (P) $= \frac{2\pi NT}{60}$

3. STRESS AND STRAIN

3.1 Stress = $\frac{Force}{Area}$ or ($\sigma = \frac{F}{A}$)

3.2 Strain (ϵ) = $\frac{change\ in\ length\ (\Delta L)}{original\ length\ (L)}$

3.3 Young's modulus (E) = $\frac{stress}{strain}$ or ($\frac{\sigma}{\epsilon}$)

3.4 $A_{shaft} = \frac{\pi D^2}{4}$

3.5 $A_{pipe} = \frac{\pi(D^2 - d^2)}{4}$

3.6 Safety factor = $\frac{Breakstress}{Workstress}$

4. HYDRAULICS

4.1 Pressure (P) = $\frac{Force\ (F)}{Area\ (A)}$

4.2 Volume = Cross-sectional area x stroke length (l or s)

4.3 Work done = force x distance

5. WHEEL AND AXLE

5.1 Velocity ratio (VR) = $\frac{effort\ distance}{load\ distance} = \frac{2D}{d_2 - d_1}$

5.2 Mechanical advantage (MA) = $\frac{Load\ (W)}{Effort(F)}$

5.3 Mechanical efficiency (η_{mech}) = $\frac{MA}{VR} \times 100\%$

6. LEVERS

6.1 Mechanical advantage (MA) = $\frac{Load\ (W)}{Effort(F)}$

6.2 Input movement (IM) = $Effort \times distance\ moved\ by\ effort$

6.3 Output movement (OM) = $load\ \times distance\ moved\ by\ load$

6.4 Velocity ratio (VR) = $\frac{\text{Input movement}}{\text{Output movement}}$

7. GEAR DRIVES
SPUR GEAR

7.1 Power (P) = $\frac{2\pi NT}{60}$

7.2 Gear ratio = $\frac{product\ of\ number\ of\ teeth\ on\ driven\ gears}{product\ of\ number\ of\ teeth\ on\ driving\ gears}$

7.3 $$\frac{N_{input}}{N_{output}} = \frac{product\ of\ number\ of\ teeth\ on\ driven\ gears}{product\ of\ number\ of\ teeth\ on\ driving\ gears}$$

7.4 Torque = $force\ \times raduis$

7.5 Torque transmitted= $gear\ ratio \times input\ torque$

7.6 Module (m) = $\frac{pitch\ circle\ diameter\ (PCD)}{number\ of\ teeth\ (T)}$

7.7 $N_1T_1 = N_2T_2$

7.8 Pitch circle diameter (PCD) = $\frac{circular\ pitch\ (CP) \times number\ of\ teeth\ (T)}{\pi}$

7.9 Outside diameter (OD) = $PCD + 2\ module$

7.10 Addendum (a) = module (m)

7.11 Dedendum (b) = 1,157 m or Dedendum (b) = 1,25 m

7.12 Cutting depth (h) = 2,157 m or Cutting depth (h) = 2,25 m

7.13 Clearance (c) = 0,157 m or Clearance (c) = 0,25 m

7.14 Circular pitch = $\pi \times m$

8. SCREW THREADS

8.1 Effective diameter = Outside diameter - ½steek

8.2 Pitch circumference = π x effective diameter

8.3 Lead = pitch × $number\ of\ starts$

8.4 Helix angle : tan $\theta = \frac{Lead}{Pitch\ circumference}$

8.5 Leading tool angle = 90° - (helix angle + clearance angle)

8.6 Following/Trailing angle = 90° + (helix angle - clearance angle)

8.7 Number of turns = $\frac{height}{lead}$

9. CINCINNATI DIVIDING HEAD TABLE FOR THE MILLING MACHINE

HOLE CIRCLES											
Side 1	24	25	28	30	34	37	38	39	41	42	43
Side 2	46	47	49	51	53	54	57	58	59	62	66

STANDARD CHANGE GEARS										
24 x 2	28	32	40	44	48	56	64	72	86	100

9.1 Simple indexing = $\frac{40}{n}$ (where n = number of divisions)

9.2 Change gears: $\frac{Dr}{Dn} = \frac{Dr}{Dv} = (A - n) \times \frac{40}{A}$ or $\frac{Dr}{Dv} = \frac{(A-n)}{A} \times \frac{40}{1}$

or

$$\frac{Dr}{Gd} = (N - n) \times \frac{40}{N}$$

10. CALCULATIONS OF FEED

10.1 Feed (f) = $f_1 \text{x} T \text{x} N$

Where f = feed per millimetre per minute
f_1 = feed per tooth in millimetres
T = number of teeth in cutter
N = number of revolutions of cutter per minute

10.2 Cutting speed (V) = π x D x N
Where D = diameter of the cutter in metres

QUESTION 1 is to be answered on this answer sheet.

VRAAG 1 moet op hierdie antwoordblad beantwoord word.

NAME/NAAM: _____

ANSWER SHEET/ANTWOORDBLAD		
QUESTION/VRAAG	**1**	**(MULTIPLE CHOICE QUESTIONS)/ (MEERVOUDIGEKEUSE-VRAE)**

1.1	A	B	C	D
1.2	A	B	C	D
1.3	A	B	C	D
1.4	A	B	C	D
1.5	A	B	C	D
1.6	A	B	C	D
1.7	A	B	C	D
1.8	A	B	C	D
1.9	A	B	C	D
1.10	A	B	C	D
1.11	A	B	C	D
1.12	A	B	C	D
1.13	A	B	C	D
1.14	A	B	C	D
1.15	A	B	C	D
1.16	A	B	C	D
1.17	A	B	C	D
1.18	A	B	C	D
1.19	A	B	C	D
1.20	A	B	C	D

TOTAL	

Tear off this page and submit with answer book.